LAMPRO

LC Series

LC5PO

LED Display Light Everywhere

Product features:

- 320X160mm universal size
- Bottom case texture design, enhanced exterior texture
- High protection class LED lamp
- New design of PCB board is more reliable
- Waterproof and moisture-proof treatment with gluing on the front side
- High Brightness, High Heat Dissipation
- High refresh, High grayscale
- Excellent visual experience
- Good Compatibility

Replace the outdoor ***P2.5~P8*** module with the same series.

- Supports 45° tangent angle*
- **Special environments such as coastal, low temperature, humidity, etc. require customized selection of appropriate products***

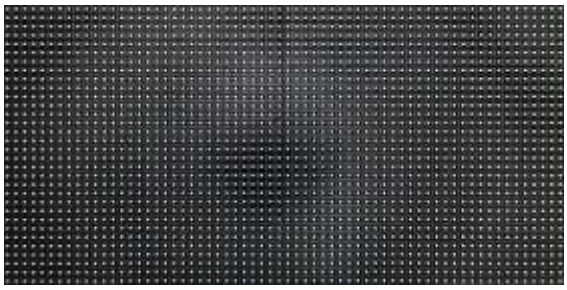

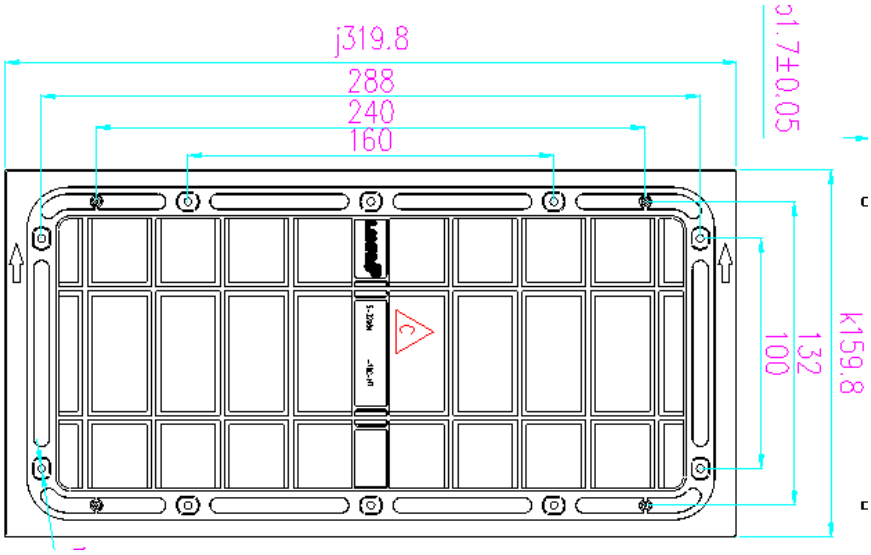

Note: Drawings are for reference only.

Address: 6 Lanjing North Road, Pingshan District, Shenzhen 518118 China
TEL: +86 - 755 – 27653939 E-mail : obu@lampro.net
Website: www.lampro.net
Update time: 2024/05/31 V2.0

LAMPRO

SPECIFICATION PARAMETERS:

	Parameter	Value
Module	Pixel Pitch	5mm
	LED Type	SMD1921
	Module Resolution（W×H）	64X32=2048 Pixels
	Pixel density（pixels/sq.m.）	40000 dot/㎡
	Module Size (WxHXD)	W320mmxH160mmxD18mm
	Module Weight	0.48±0.02kg
	HUB	HUB75
Optical	Single-dot Brightness Calibration	Support
	Brightness	4500~5000 cd/㎡
	Color Temperature	6500K (1000K ~ 9500K Adjustable)
	Beam Angle（Hor/Ver°）	140°/140°
	Brightness/Color Uniformity	⩾98%
	Contrast Ratio	5000:1
Electronic	Input Power <Max>	879 W/㎡
	Input Power <Typical>	293 W/㎡
	Power Supply Input Voltage	AC90 ~ 132V/ AC186 ~ 264V, Frequency 47-63（Hz）
Performance	Frame Changing Frequency	60Hz
	Refresh Rate	3840Hz
	Processing Depth	12~14Bit
	Video Support	2K HD, 4K UHD
Environme	Life Span（hrs）	100000hrs
	Working Temp/Humidity（℃/RH）	-20℃~50℃ / 10%~80%RH (No Condensation)
	Storage Temp/Humidity（℃/RH）	-20℃~55℃ / 10%~85%RH (No Condensation)
	Certification	BIS/CE/CB/ROHS/EAC

Note:

1.Product pictures are for illustration only, the actual product effects (including but not limited to appearance, color, size) may be slightly different, please refer to the actual product.

2.The specification parameters are reference values. Part of the data comes from Unilumin' s internal laboratory and is obtained under a specific test environment. In actual use, it may be slightly different due to product batch differences, configuration differences, software versions, use conditions and environmental factors. Actual usage shall prevail.

3. Different configurations can achieve different refresh rates.